LIGHT-OIL BURNERS AT TWO STAGES

CE

FBR

BURNERS MADE IN ITALY

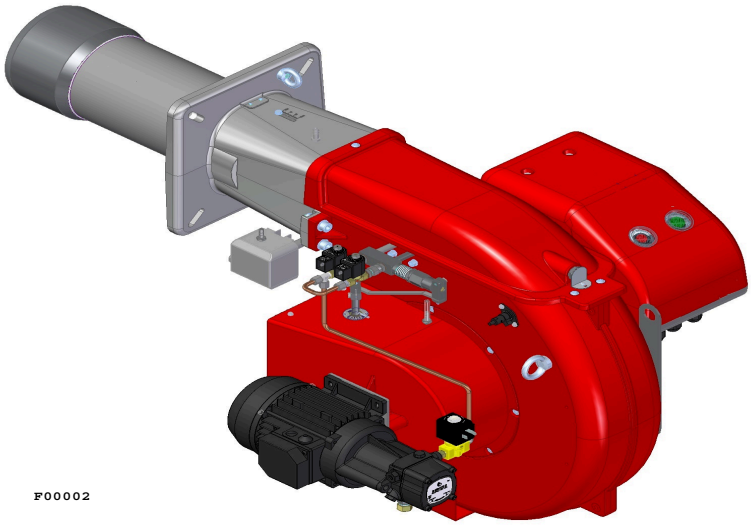

FGP 75/2
FGP 100/2 EVO

Installation, use and maintenance instructions

070084_2_B

TECHNICAL CHARACTERISTICS
TECHNICAL DATA 2
OPERATING RANGE DIAGRAM FGP 75/2 3
OPERATING RANGE DIAGRAM FGP 100/2 EVO 3
DIMENSIONS FGP 75/2 [MM] 4
DIMENSIONS FGP 100/2 EVO [MM] 5
BURNER INSTALLATION 5
BURNER SIGNAL DESCRIPTION 6
INSTALLATION
SAFETY 7
PRELIMINARY CHECKS 7
CHECK SUPPLY, TRANSPORT, PACKAGING, STORAGE 7
BURNER CHARACTERISTICS CHECK 7
LIFTING AND MOVING OF THE BURNER FGP 75/2 8
LIFTING AND MOVING OF THE BURNER FGP 100/2 EVO 10
CORRECT BURNER POSITION 11
BOILER PLATE 11
FLAME TUBE LENGTH 11
HYDRAULIC SYSTEM
HYDRAULIC SYSTEM LAYOUT FGP 75/2 12
HYDRAULIC SYSTEM LAYOUT FGP 100/2 EVO 13
PIPES SIZING 14
FGP 75/2 15
FGP 100/2 EVO 15
ELECTRICAL SYSTEM
ELECTRICAL PANEL LAYOUT 16
WORKING DIAGRAM OF THE ELECTRICAL DEVICE 16
START-UP AND CALIBRATION
BURNER CALIBRATION 16
CALIBRATION OF THE AIR PRESSURE SWITCH (PA) 16
INDICATIVE CALIBRATIONS 17
PUMP CALIBRATION 17
TABLE OF ADVISABLE CALIBRATIONS FGP 75/2 18
TABLE OF ADVISABLE CALIBRATIONS FGP 100/2 EVO 18
MAINTENANCE
EXTRACTION OF THE COMBUSTION HEAD 20
ELECTRODES POSITIONING 21
TROUBLESHOOTING 22
SPARE PARTS AND DISPOSAL 23

TECHNICAL DATA

MODEL		FGP 75/2	FGP 100/2 EVO
Flow min. 1°st. / min. 2°st. - max. 2°st. *	[kg/h]	17.5/35-80	21.8/40-100
Thermal power min. 1°st. / min. 2°st. - max. 2°st. *	[Mcal/h]	178/357-816	222.4/408.0-1020.0
Thermal power min. 1°st. / min. 2°st. - max. 2°st. *	[kW]	207/415-949	258.6/474.4-1186.0
Fuel: LIGHT-OIL 1.5°E at 20°C = 6.2 cSt = 35 sec Redwood N°1			
Intermitted working operation (min. 1 stop every 24 hours) two stages			
Environmental conditions operation / storage:	-15...+40°C / -20...+70°C, rel. humidity max. 80%		
Max. temperature combustion air	[°C]	60	60
Nominal electric power	[kW]	1.6	2.1
Fan motor	[kW]	1.5	1.5
Pump motor	[kW]	-	0.37
Nominal motor current absorption	[A]	3.4	4.5
Nominal auxiliary absorption	[A]	0.3	0.82
Power supply:	3~400V, 1N~230V - 50Hz		
Electric protection degree:		IP 40	IP 40
Noisiness ** min-max	[dBA]	78-82.5	82-83.6
NOx min. 1°st. / min. 2°st. - max. 2°st. *	[mg/kWh]	111/132-141	143.4/161.4 - 145.0
NOx Class		2	2
Burner weight ***	[kg]	47	52

* Reference conditions: Environment temperature 20 C - Barometric pressure 1013 mbars - Altitude 0 metre (sea level).
** Measured sonourous pressure in the combustion lab, with funcional burner on beta boiler in a distance of 1 m (UNI EN ISO 3746).
*** For burner with long head, add 2 kg to the weight.

OPERATING RANGE DIAGRAM FGP 75/2

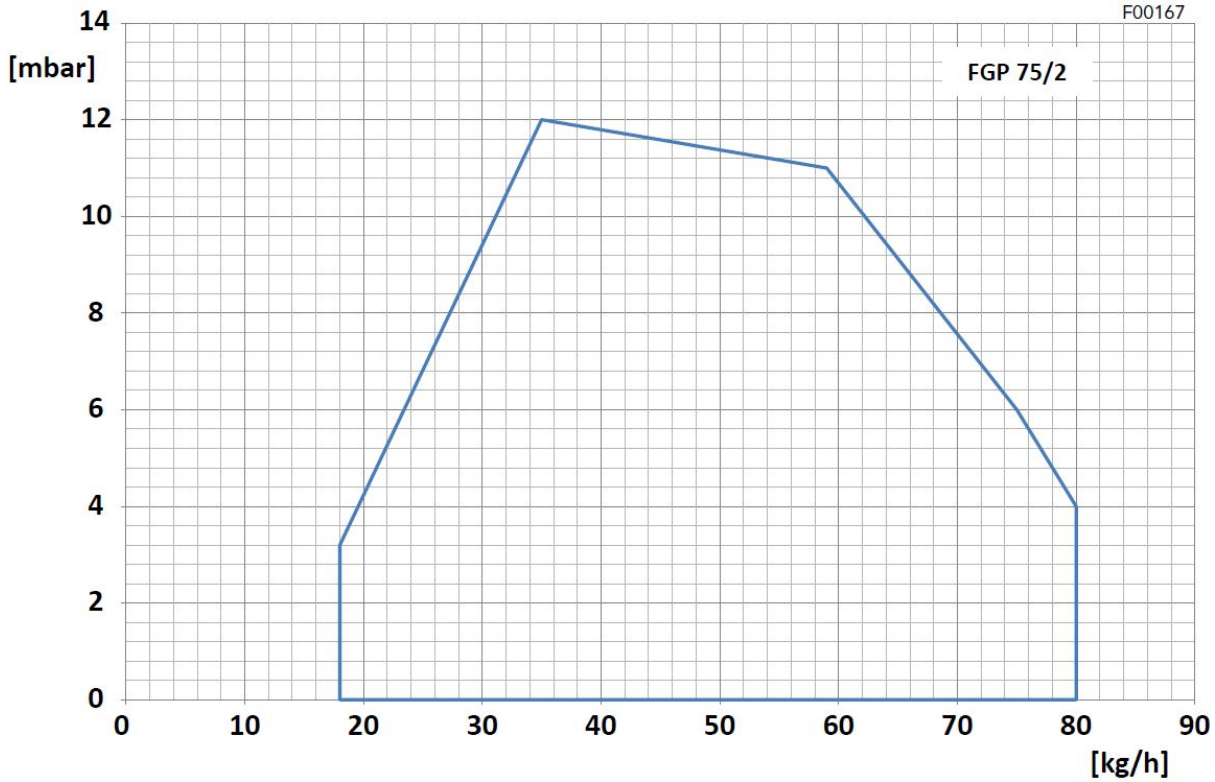

Fig. 1 X = Fuel consumption Y = Combustion chamber pressure

The firing rates has been obtained based on test boilers in accordance with EN267 standards and are indicative of matching the burner to the boiler. For the correct operation of the burner, combustion chamber dimensions must be in accordance with current regulation. In case of non-compliance, contact the manufacturer.

OPERATING RANGE DIAGRAM FGP 100/2 EVO

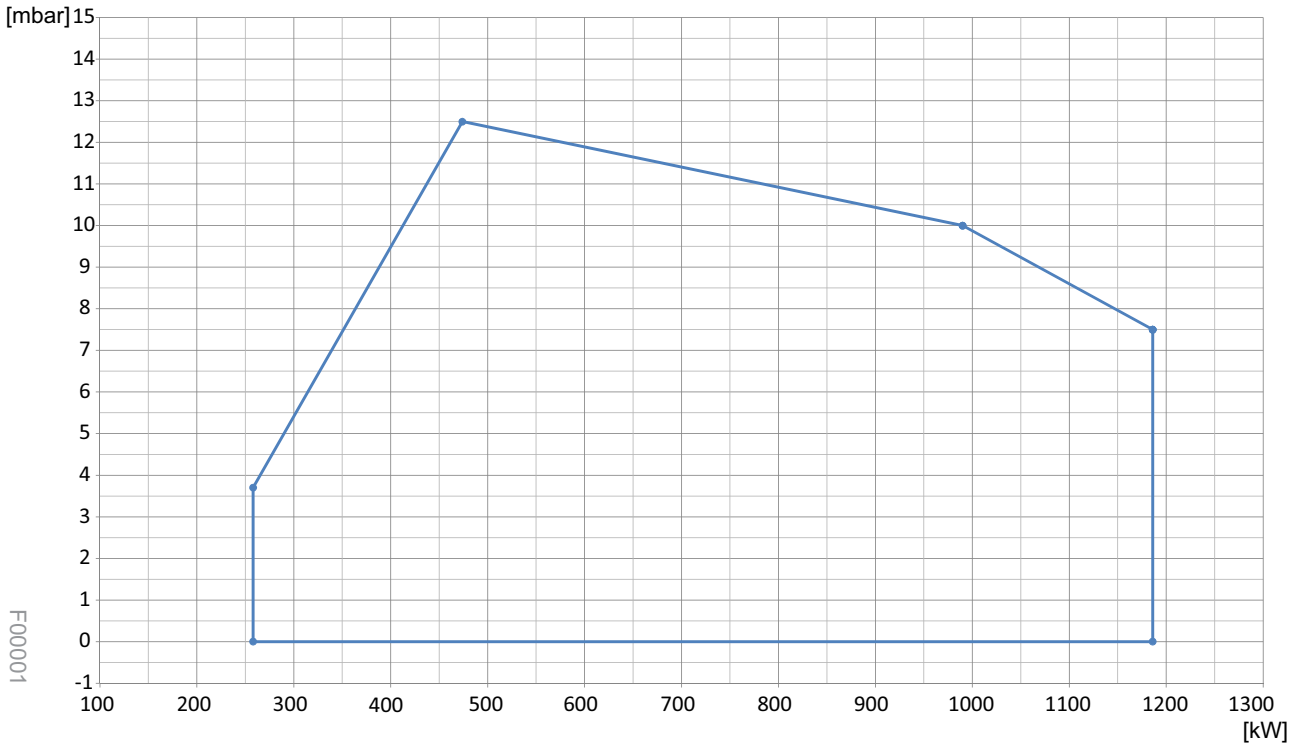

Fig. 2 X = Thermal power Y = Pression in the combustion chamber

The firing rates has been obtained based on test boilers in accordance with EN267 standards and are indicative of matching the burner to the boiler. For the correct operation of the burner, combustion chamber dimensions must be in accordance with current regulation. In case of non-compliance, contact the manufacturer.

DIMENSIONS FGP 75/2 [MM]

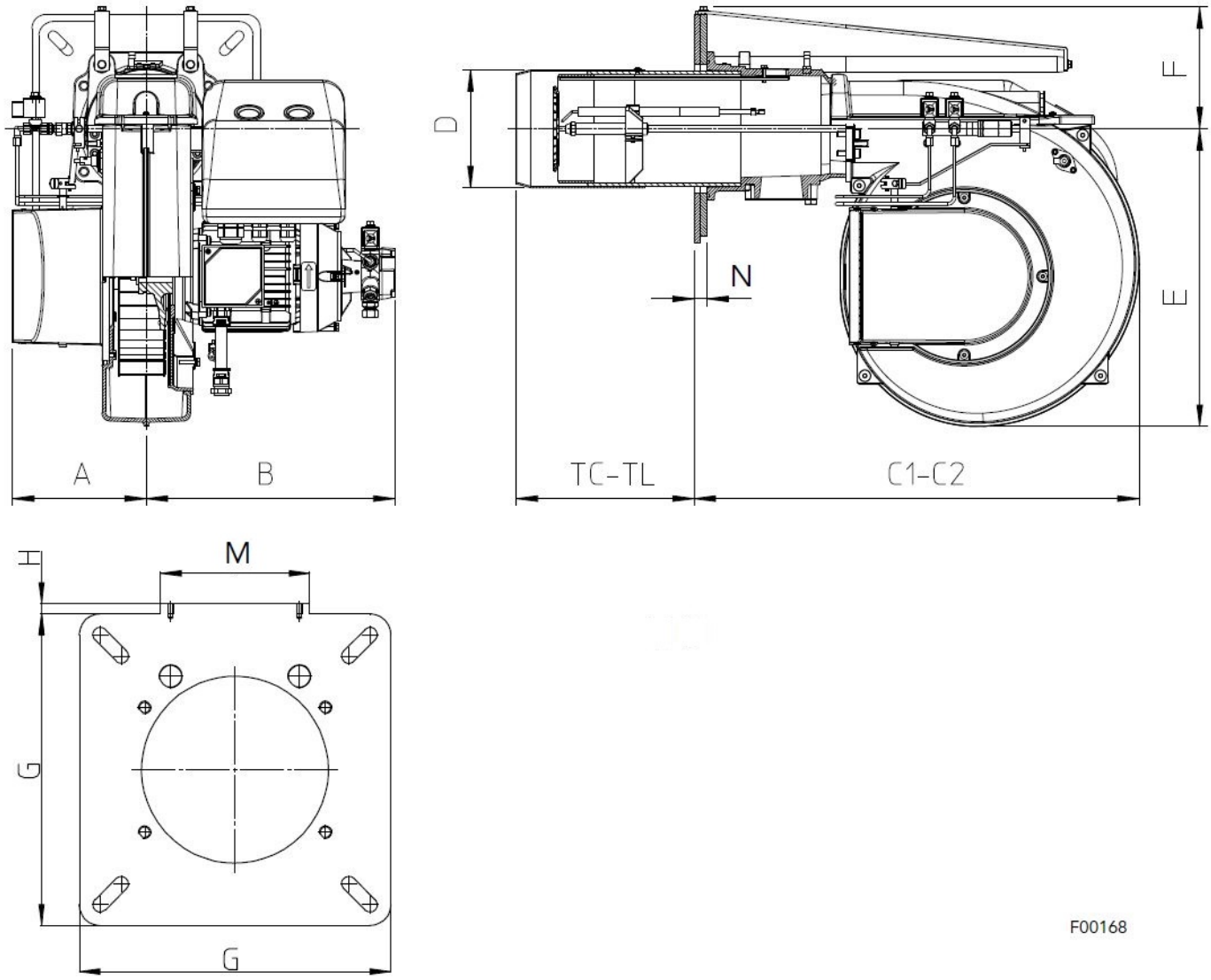

Fig. 3 Dimensions FGP 75/2

MODEL	A	B	C1	C2	D	E	F	G	H	M	N
FGP 75/2	187	350	623	1062	165	417	170	300	10	144	18

TC - TL: Please see chapter "Flame tube length"
C2: dimension with the burner in backward position, during maintenance.

DIMENSIONS FGP 100/2 EVO [MM]

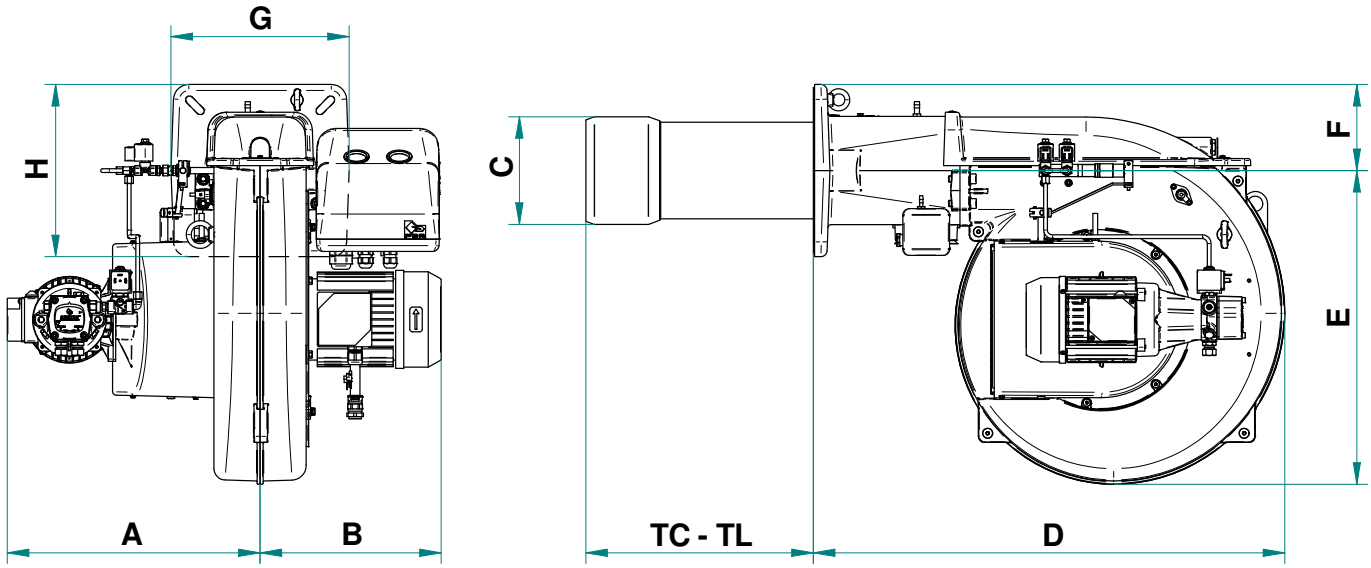

Fig. 4 Dimensions FGP 100/2 EVO

MODEL	A	B	C	D	E	F	G	H
FGP 100/2 EVO	411	294.5	175	766.5	510	140	290	280

TC - TL: Please see chapter "Flame tube length"

BURNER INSTALLATION

For the installation of the burner to the generator, follow to the diagram shown below:

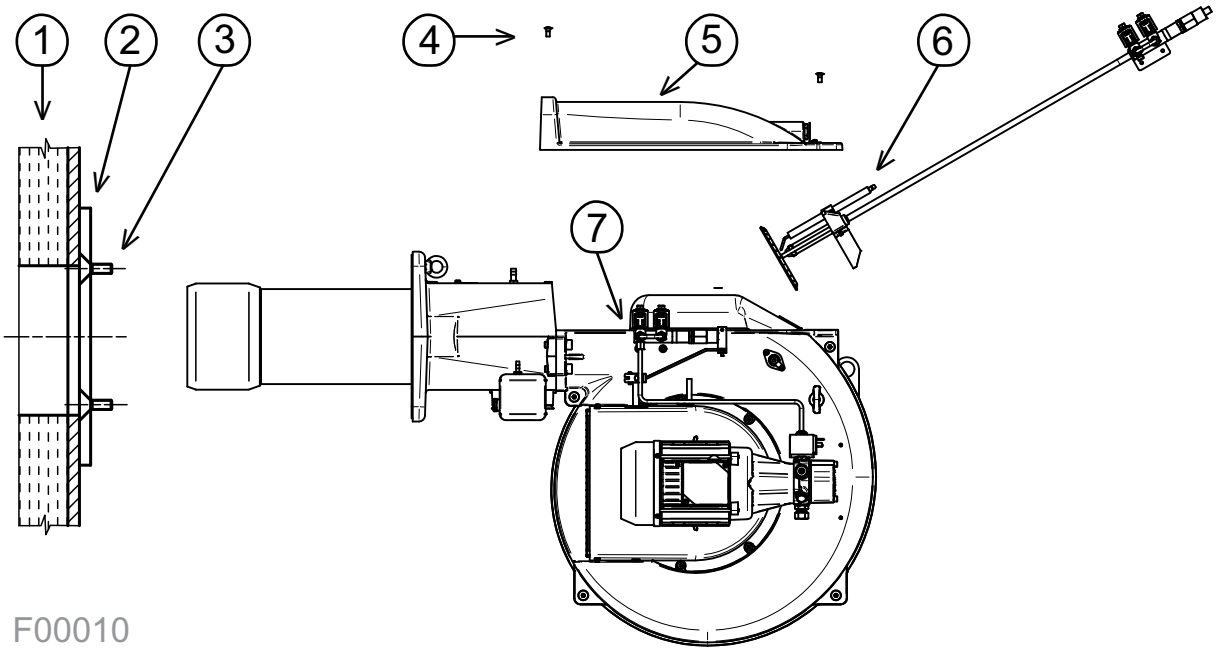

Fig. 5 Burner installation

LEGEND

1) Generator
2) Counterflange
3) Stud bolt
4) Screw
5) Burner's body cover
6) Head group
7) Pipe connection and screws

BURNER SIGNAL DESCRIPTION

In the picture below there are indicated all the signalation present on the burner:

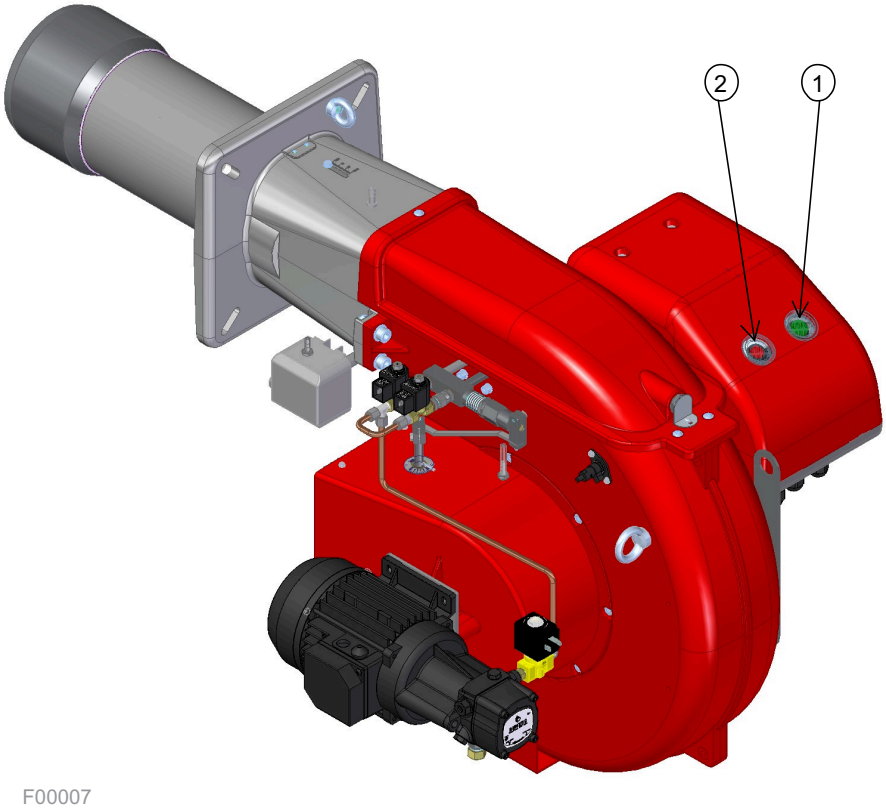

Fig. 6 Burner signal description

LEGEND

1) ON/OFF button

2) Reset from lockout button + status lamp

The multicolor signal lamp in the lockout reset button (pos.2) is the key indicating element for visual diagnostics and interface diagnostics.
In normal operation, the different operating states are indicated in the form of color codes; please refer to electrical device handbook supplied with the present instructions.

After a non-alterable lockout, the red signal lamp in the lockout reset button (pos.2) lights up.
By pressing the lockout reset button (pos.2) for more than 3 seconds, the visual diagnostics of the cause of fault can be activated; please refer to electrical device handbook supplied with the present instructions.

For close the diagnostics mode and for switch on the burner again, it is necessary to reset the burner control.
Press the lockout reset button (pos.2) for about 1 second (<3 seconds).

After a non-alterable lockout, the red signal lamp in the lockout reset button (pos.2) lights up.
For reset the control box press the lockout reset button (pos.2) for about 1 second (<3 seconds).

SAFETY

Before burner installation, clean carefully all around the area where the burner will be installed and arrange the correct lighting of the room.

WARNING The installation, adjustment and maintenance of the appliance must be carried out by professionaly qualified person in compliance with the standards and regulations of the laws in force as a wrong installation may cause damages to people, animals and things for which the Manufacturer will not be responsable.

WARNING Before starting installation, maintenance and disassembly turn off the electrical supply and check that it is not possible to turn accidentally the main switch on, close fuel inlet valves and make sure they could not accidentally be opened.

PRELIMINARY CHECKS

CHECK SUPPLY, TRANSPORT, PACKAGING, STORAGE

WARNING CHECK SUPPLY
Check that the supply is complete and without transport damages. After removing all the packaging, check the integrity of the contents. If in dubt do not use the burner and contact the supplier.
TRANSPORT
The transport weights of the burner and the gas train are indicated in the technical data.
STORAGE
Observe the environment temperatures which are allowed for storage and indicated in the technical data.

WARNING The packaging materials must not be abandoned as they may cause danger and pollution, but they should be collected and left in a appropriate place.

BURNER CHARACTERISTICS CHECK

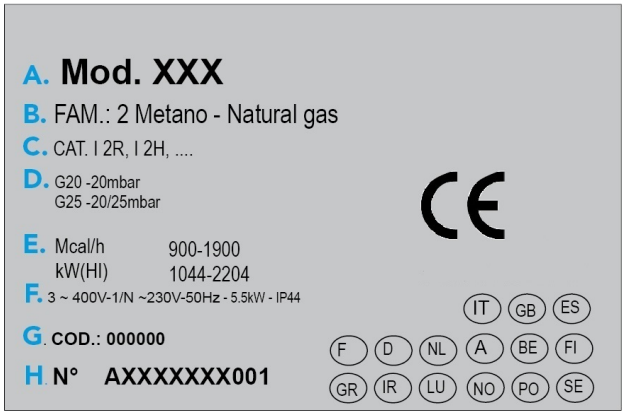

F00014

The data plate of the burner shows:
A. the model;
B. fuel family;
C. fuel category;
D. fuel 1 pressure (if appicable, fuel 2 pressure);
E. minimum and maximum thermal power;
F. the data for electrical supply, absorbed electrical power and electric protection degree;
G. the code;
H. the serial number.
Moreover the data plate includes CE labeling, CE Certification PIN and the list of countries where the certification is applicable.

WARNING Check that the capacity of the boiler is within the operating range of the burner.

WARNING Violation, removal or loss of the data plate of the burner and any other components compromise the correct identification of the burner and hinder the installation and maintenance operation.

LIFTING AND MOVING OF THE BURNER FGP 75/2

ATTENTION! These operations must be carried out by specialised and trained personnel. If these operations are not carried out perfectly, there is the residual risk of the burner to overturn and fall down.

For the burner lifting is it necessary to use a band; the band it is passed under and around the pins slide according to the mode shown in the images below.
The band must be wrapped with a "double loop" (in order to be blocked to the burner) and the axial positioning of the band must be place at the cover fixing screw. This determines the correct load balancing.

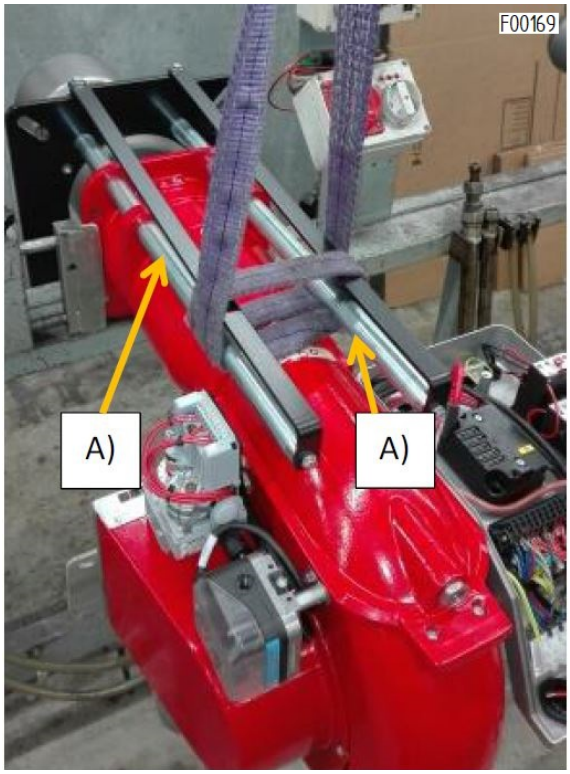

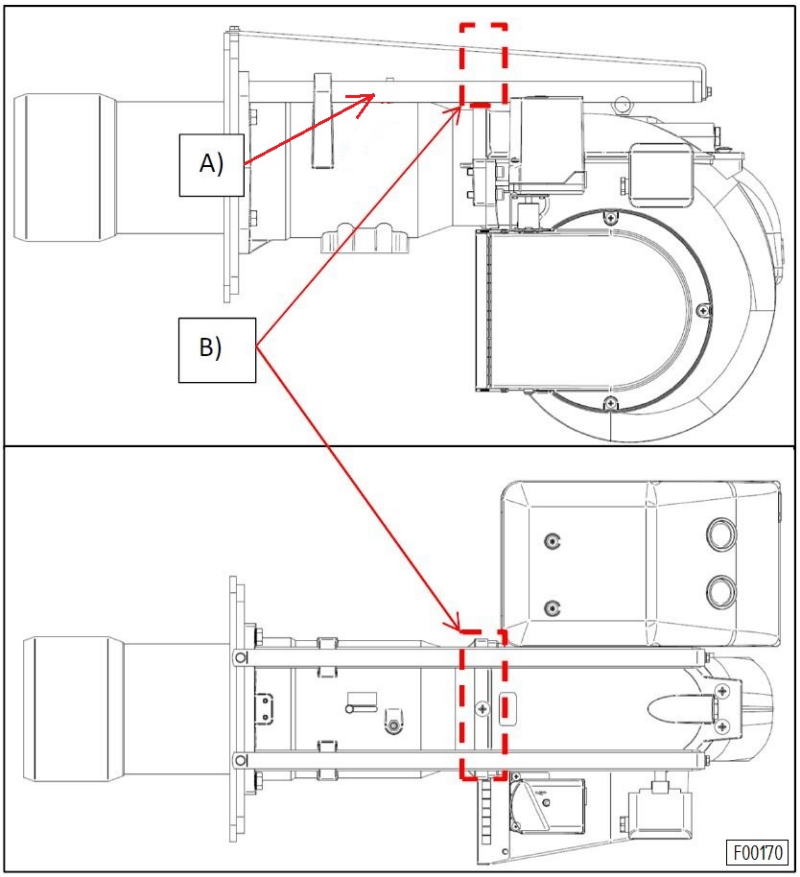

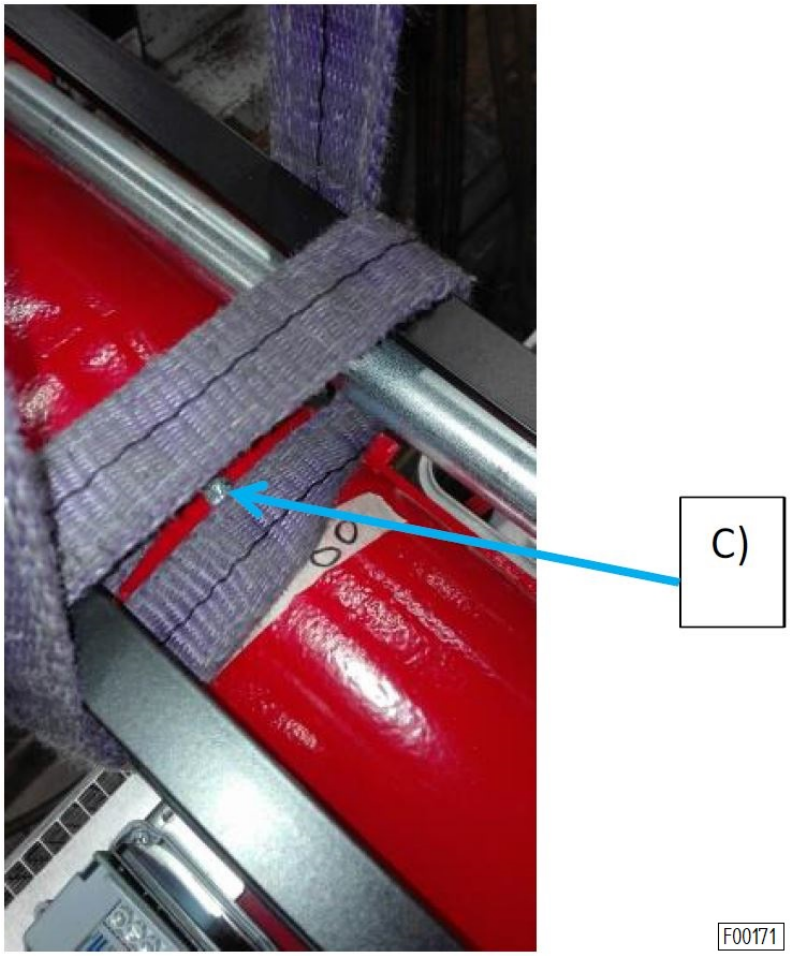

LEGEND

A) Slide pins

B) Axial position of the lifting band

C) The band must be wrapped in corrispondence of the cover fixing screw

LIFTING AND MOVING OF THE BURNER FGP 100/2 EVO

ATTENTION! These operations must be carried out by specialised and trained personnel. If these operations are not carried out perfectly, there is the residual risk of the burner to overturn and fall down.

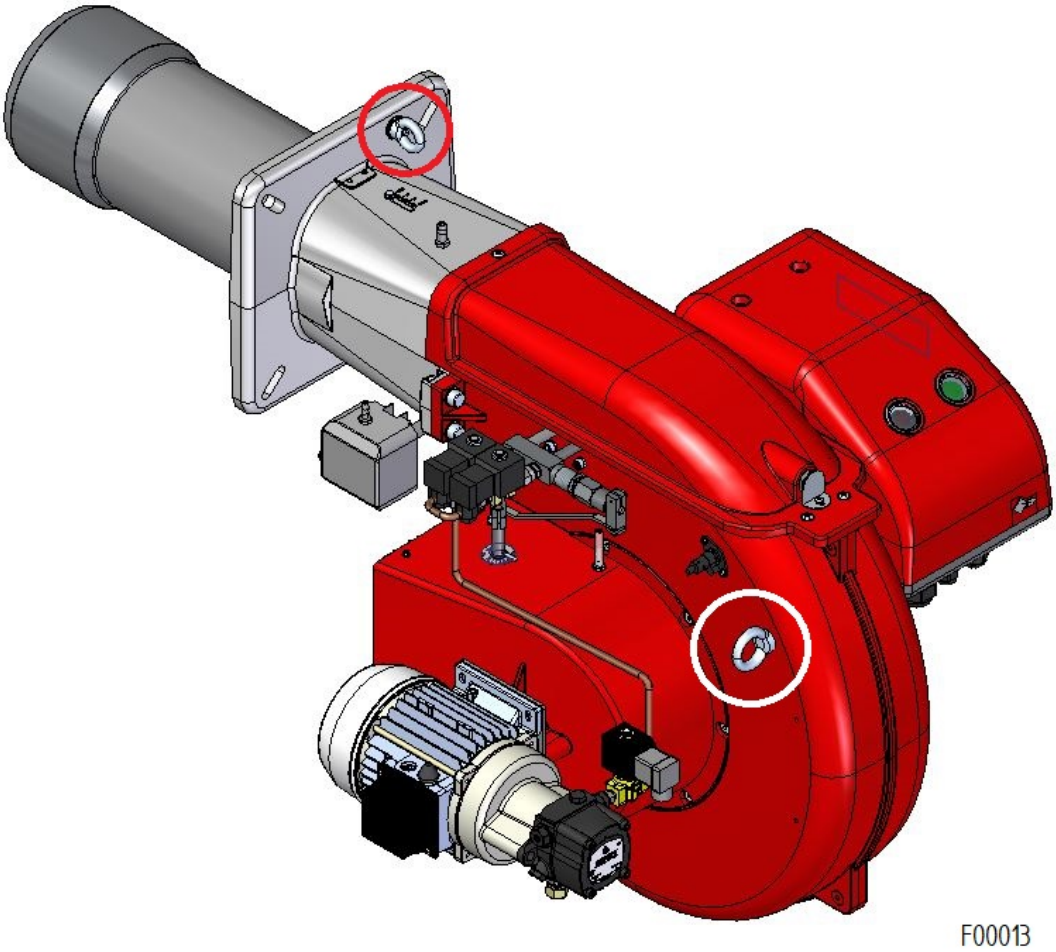

Fig. 7 The burner is provided with eyebolts, for handling operations.

CORRECT BURNER POSITION

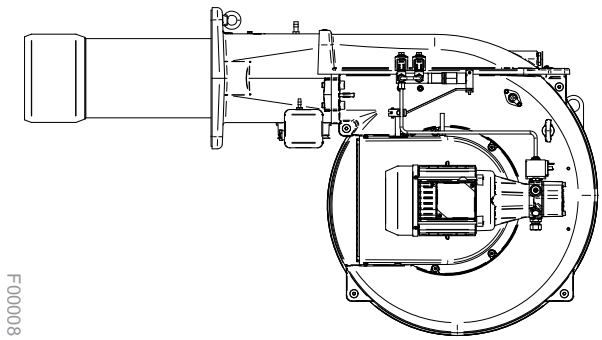

Fig. 8 Correct burner position

The burner is designed to work only in the position shown in picture.

If different deployment are needed, please contact our Technical-Sales Department to verify the disponibility of required kits.

BOILER PLATE

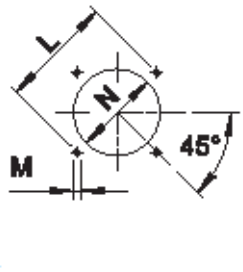

Fig. 9 Boiler plate

* Suggested dimension of connection between burner and generator.

MODEL		L min	L max	M	N min	N *	N max
FGP 75/2	mm	310	368	M12	180	180	250
FGP 100/2 EVO	mm	275	325	M10	185	185	220

FLAME TUBE LENGTH

Flame tube length must be selected based on the specifications supplied by boiler manufacturer and, in any case, it must be greater than the thickness of the boiler door included its insulation.
In case of boilers with flame inversion or front flue combustion chambers, it is necessary to insulate the area between the flame tube and front door with refractory material. This protection material must not impede flame tube extraction.

MODEL		TC	TL **
FGP 75/2	mm	235	370
FGP 100/2 EVO	mm	250	335

** For different flame lengths, please contact our Technical-Sales Department.

Warning! The fuel supply system to the burner must be equipped with all the safety and control devices required by the regulations in force. If provided for on a national standard basis, the manual fuel shut-off valve is not part of the burner equipment but of the requirements of the heat generator room.

HYDRAULIC SYSTEM LAYOUT FGP 75/2

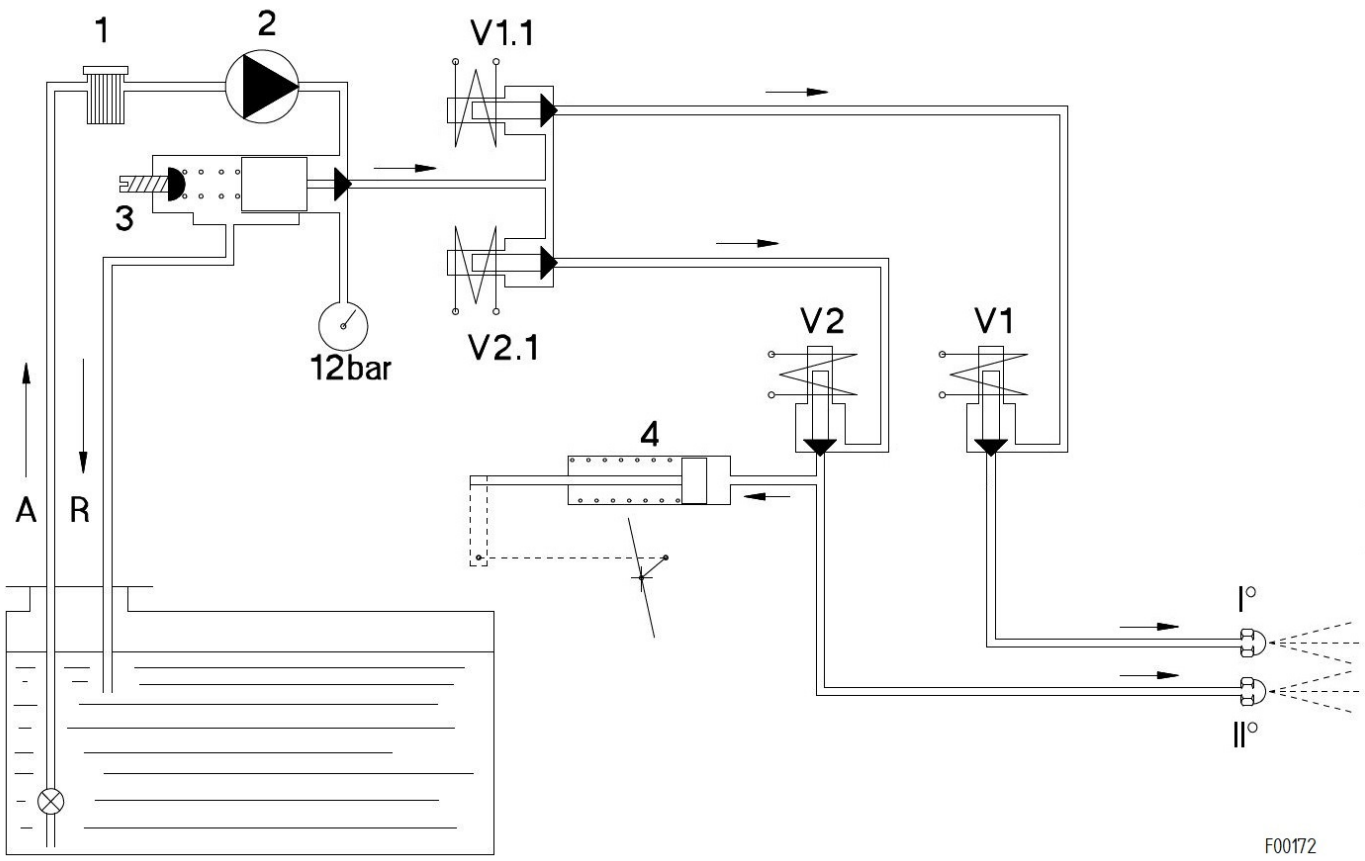

Fig. 10 Hydraulic system layout FGP 75/2

1ST PHASE - PRE-WASHING:

At the burner starting, the light-oil, sucked by the pump (pos.2), is cleaned by the filter (pos.1) and sent to the return pipe through the by pass regulator (pos.3).

2ND PHASE - 1ST STAGE IGNITION:

After about 15secs. of pre-washing, the valves V1.1 and V1 open, the light-oil comes out atomized by the nozzle (I) and it is ignited by the voltaic arc generated by the ignition transformer. The pump light-oil excess delivery is by-passed on the return pipe through the pressure regulator (pos.3).

SAFETY TIME:

After about 5-10 secs. from excitation of the I stage valve V1, if the light-oil does not ignite, the burner stops (lock).

3RD PHASE - 2ND STAGE IGNITION:

After about 5-10 secs. from the igniton of the I stage, the II stage valves V2.1 and V2 get excited and the light-oil is sent to the 2nd nozzle (II) and at the same time to the jack (pos.4) which causes the opening of the II stage air shutter.

HYDRAULIC SYSTEM LAYOUT FGP 100/2 EVO

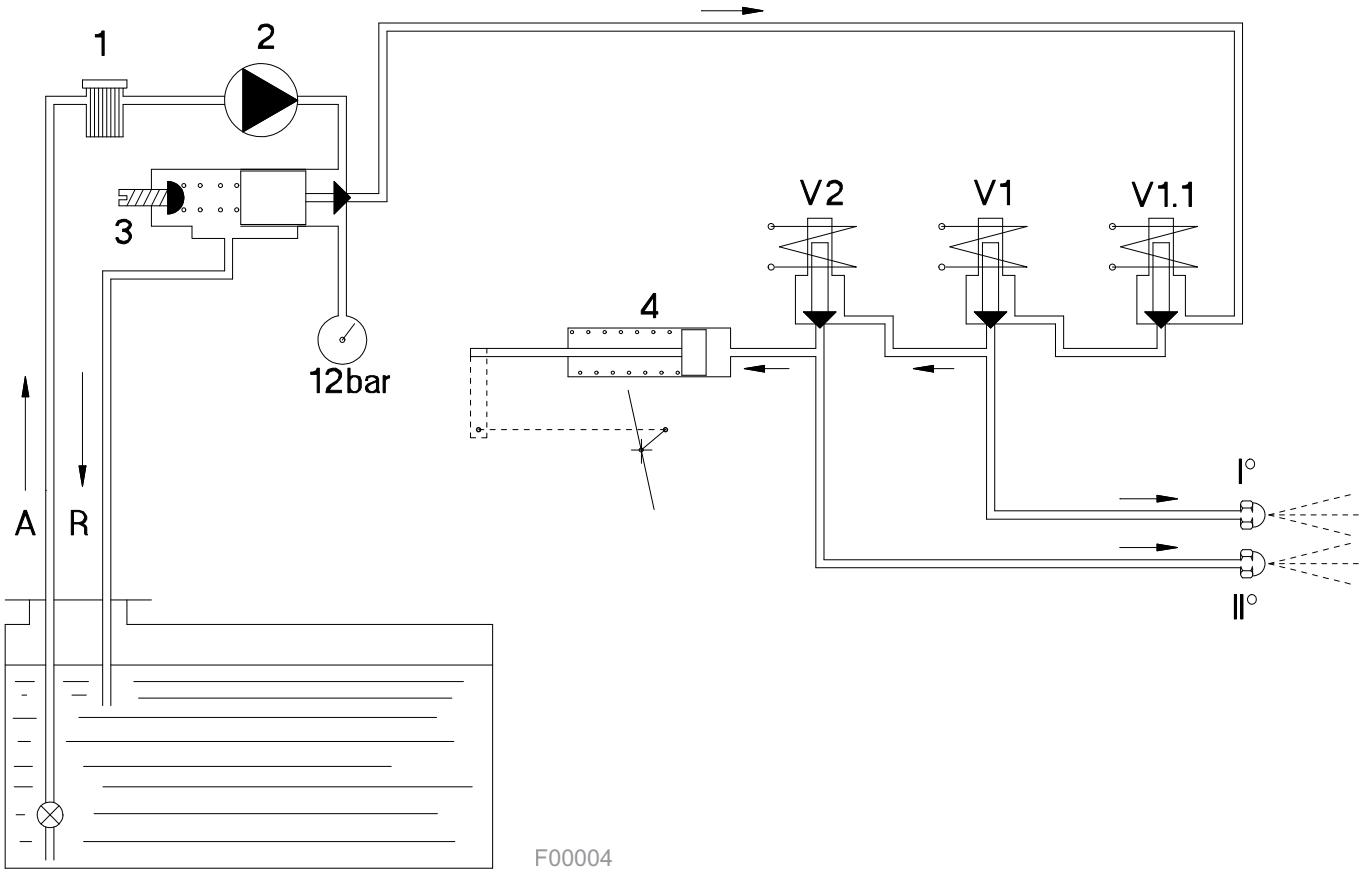

Fig. 11 Hydraulic system layout FGP 100/2 EVO

1ST PHASE - PRE-WASHING:

At the burner starting, the light-oil, sucked by the pump (pos.2), is cleaned by the filter (pos.1) and sent to the return pipe through the by pass regulator (pos.3).

2ND PHASE - 1ST STAGE IGNITION:

After about 15secs. of pre-washing, the valves V1.1 and V1 open, the light-oil comes out atomized by the nozzle (I) and it is ignited by the voltaic arc generated by the ignition transformer. The pump light-oil excess delivery is by-passed on the return pipe through the pressure regulator (pos.3).

SAFETY TIME:

After about 5-10 secs. from excitation of the I stage valve V1, if the light-oil does not ignite, the burner stops (lock).

3RD PHASE - 2ND STAGE IGNITION:

After about 5-10 secs. from the igniton of the I stage, the II stage valve V2 gets excited and the light-oil is sent to the 2nd nozzle (II) and at the same time to the jack (pos.4) which causes the opening of the II stage air shutter.

PIPES SIZING

Check the return pipe for obstructions before starting the burner. An obstruction would cause the pump sealing to break.

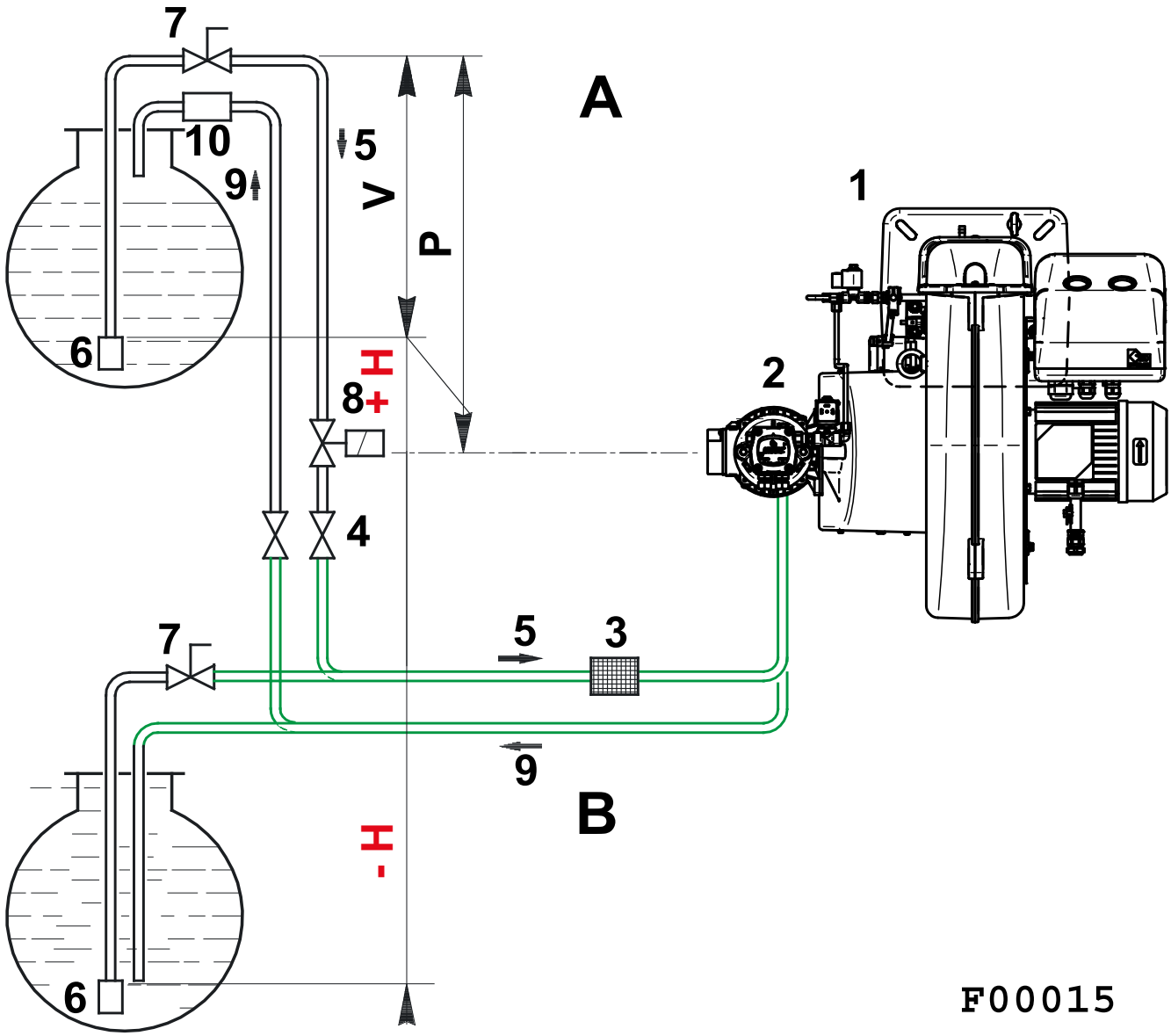

LEGEND

H) Pump/Foot valve height difference

1) Burner

2) Pump

3) Filter

4) Manual on/off valve

5) Suction line

6) Foot valve

7) Fast closing manual valve, remote controlled (only Italy)

8) On/off solenoid valve (only Italy)

9) Return line

10) Check valve (only Italy)

The burner is equipped with a self-priming pump and is able to feed itself autonomously, in compliance with the limits indicated.

FGP 75/2

H [m]	L [m]			
	Øi : 8 mm	Øi : 10 mm	Øi : 12 mm	Øi : 14 mm
+ 4,0	35	92	150	150
+ 3,0	31	81	150	150
+ 2,0	26	69	148	150
+ 1,0	21	57	124	150
+ 0,5	19	52	112	150
0	16	46	100	150
- 0,5	14	40	88	150
- 1,0	12	34	76	144
- 2,0	7	23	52	100
- 3,0	-	11	28	55
- 4,0	-	-	4	11

FGP 100/2 EVO

H [m]	L [m]			
	Øi : 10 mm	Øi : 12 mm	Øi : 14 mm	Øi : 16 mm
+ 4,0	22	28	53	92
+ 3,0	20	24	47	80
+ 2,0	17	21	40	70
+ 1,0	14	17	33	58
+ 0,5	12	15	30	52
0	11	13	27	47
- 0,5	9	12	23	41
- 1,0	8	10	20	36
- 2,0	-	-	13	24
- 3,0	-	-	7	13
- 4,0	-	-	-	-

Case A: Tank higher than the burner.
The "P" distance must not exceed 10 m and that the V quota must not exceed 4 m to make it possible to self-prime the pump even with the tank almost empty.

Case B: Tank lower than the burner.
The low pressure in the pump must not exceed 0.4 bar. It is advisable to have the return pipe arrive at the same height as the suction pipe.

ELECTRICAL PANEL LAYOUT

Please refer to elctrical panel layout supplied with the present Instructions.

WORKING DIAGRAM OF THE ELECTRICAL DEVICE

Please refer to electrical device handbook supplied with the present Instructions.

BURNER CALIBRATION

ATTENTION: Before starting the burner it is necessary to respect the general norms of security; especially check:

- Electrical supply
- The tightness of the plant and its correct realization
- The presence of water in the plant
- The ventilation of the boiler location
- The correct function of the thermostats and pressure switches of the boiler.

CALIBRATION OF THE AIR PRESSURE SWITCH (PA)

The air pressure switch checks the minimum AIR pressure of the fan.

N.B. The help of a combustion analyser will be necessary for the setting.

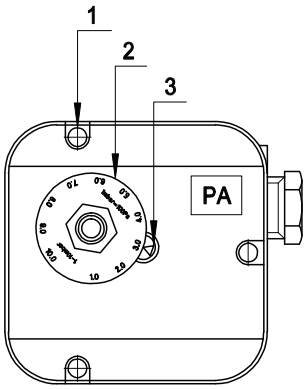

Fig. 12 1-Cover screw 2-Regulation collar 3-Regulation indicator

The air pressure switch checks the AIR pressure of the fan. When the AIR pressure value generated by the fan is lower than the value set to the air pressure switch, the burner goes to lockout. For its calibrations proceed like follows:

N.B.: The calibration of the air pressure switch shall be done at the minimum power.

a) Obstruct the air inlet gradually without changing the position of the shutter, until a defect of air is obtained : CO<=10.000 ppm.

b) Turn the regulation collar of the pressure switch slowly until the safety lock-out of the burner is obtained.

c) Open completely the air inlet and start the burner.

d) Repeat point a) and control the intervention of the air pressure switch.

INDICATIVE CALIBRATIONS

PUMP CALIBRATION

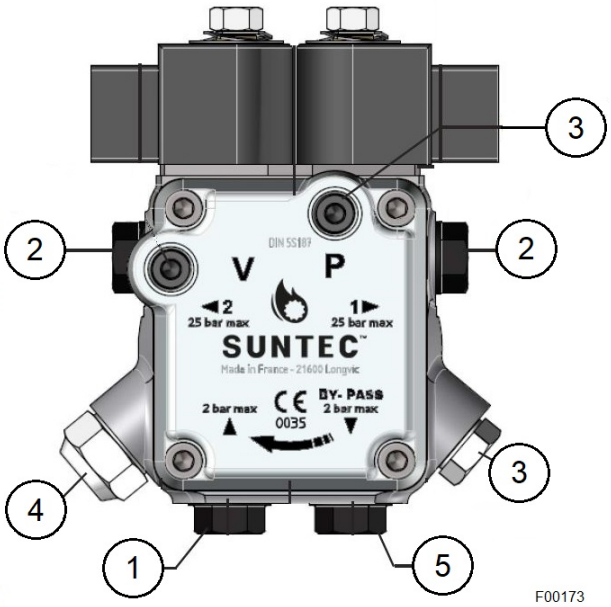

Fig. 13 Pump calibration FGP 75/2

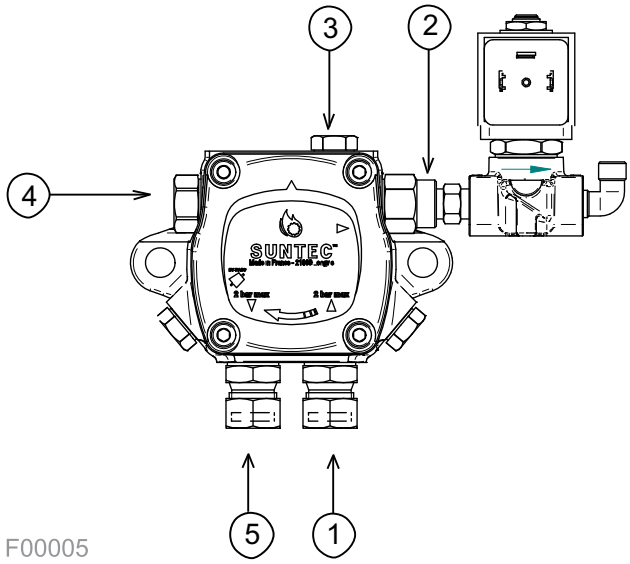

Fig. 14 Pump calibration FGP 100/2 EVO

LEGEND

1) Suction

2) Outlet

3) Pressure gauge port

4) Pressure adjustment

5) By-pass Return

TABLE OF ADVISABLE CALIBRATIONS FGP 75/2

Calibrations effected with pressure in chambers 0,1 mbar.
The definitive calibration must be done in operation by means of a combustion analyser.

NOZZLES G.P.H.		PRESSURE	FLOW	HEAD ADJUST-MENT	AIR OPEN 1st STAGE	AIR OPEN 2nd STAGE
I° 60°	II° 45°	[bar]	[kg/h]	[N° TACCHE]	[N° TACCHE]	[N° TACCHE]
4.00	4.00	13	35	0	1.4	3
5.00	5.00	11	40	6	2	3.3
5.00	6.00	12	45	9	2	4
6.00	6.50	11	50	12	2.5	4.3
7.00	7.00	11	55	15	2.8	4.7
7.00	8.00	11	60	18	2.8	5
8.00	8.00	11	65	21	3.5	5.3
9.00	9.00	11	70	24	3.8	6
9.00	10.00	12	75	27	3.8	7
10.00	10.00	12	80	30	4.3	9

TABLE OF ADVISABLE CALIBRATIONS FGP 100/2 EVO

Calibrations effected with pressure in chambers 0,1 mbar.
The definitive calibration must be done in operation by means of a combustion analyser.

NOZZLES G.P.H.		PRESSURE	FLOW	HEAD ADJUST-MENT	AIR OPEN 1st STAGE	AIR OPEN 2nd STAGE
I° 60°	II° 45°	[bar]	[kg/h]	[NOTCH N°]	[NOTCH N°]	[NOTCH N°]
4.50	4.00	16	40	0	1.3	2.5
5.50	5.50	15	50	3	1.8	3
6.00	7.00	14	60	6	2	3.5
7.00	7.00	14	65	9	2	3.5
7.00	8.00	14	70	12	2	4
8.00	8.00	15	75	15	2.5	4
8.00	9.00	15	80	18	2.5	4.5
9.00	9.00	15	85	21	2.5	4.5
9.00	10.00	16	90	24	3	5
10.00	11.00	14	95	27	3	5
10.00	12.00	14	100	30	3	5.5

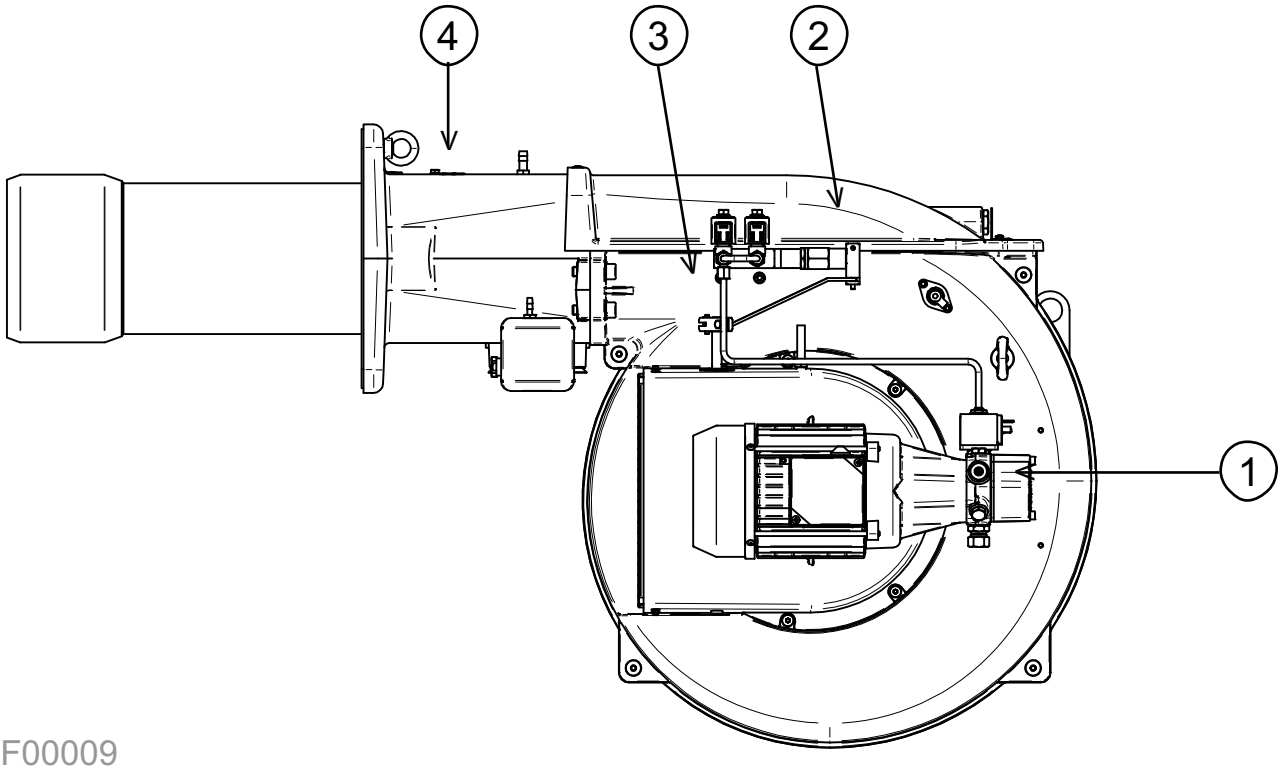

LEGEND

1) Pressure calibration

2) 2nd stage adjustment

3) 1st stage adjustment

4) Head adjustment

DANGER

Before any operation:
- Shut down the burner and disconnect current using the main switch.
- Close the fuel valve.

WARNING

The maintenance should be carried out by professional qualified people and under observation of the current applicable laws and standards, because bad maintenance can cause damages to people, animals or things
Maintenance operations, calibration and substitution of unperfect components should be performed by a service center authorized by the manufacturer and only original components can be used.

WARNING

Main maintenance operations:
Clean the outside of the burner;
Clean the intake;
Verify the combustion values: if necessary recalibrate the burner;
Check and clean the photocell or flame probe;
Check and clean fuel filter, substitute it fi needed;
Check the integrity of fuel tubes;
Extract, examine and clean the combustion head: verify its integrity, shape and correct positioning;
Check and clean the fan;
Check the electrodes, clean them and substitute them if needed;

EXTRACTION OF THE COMBUSTION HEAD

ATTENTION: REMOVE VOLTAGE!

it is possible to take out the head group without removing the burner from the boiler:

a) Take off the cover (pos.5) by loosening the screws (pos.4)
b) Loosen the connection and the screws (pos.7)
c) Take out the head group (pos.6) and pull the ignition cables.

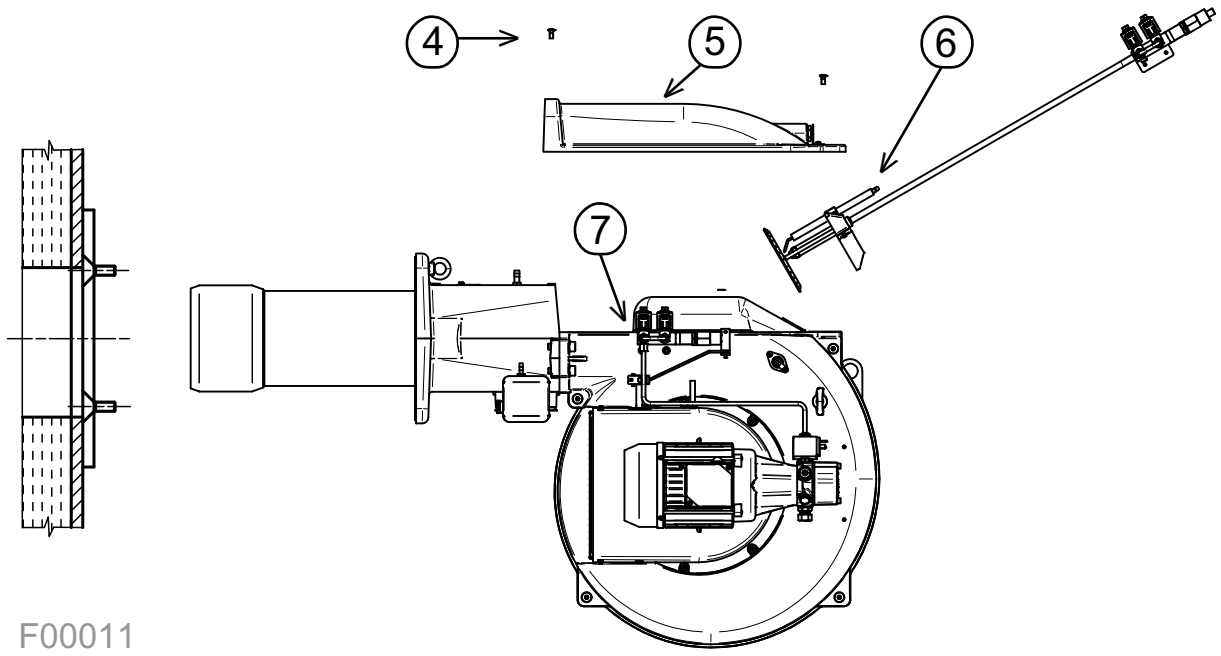

Fig. 15 Extraction of the combustion head

ELECTRODES POSITIONING

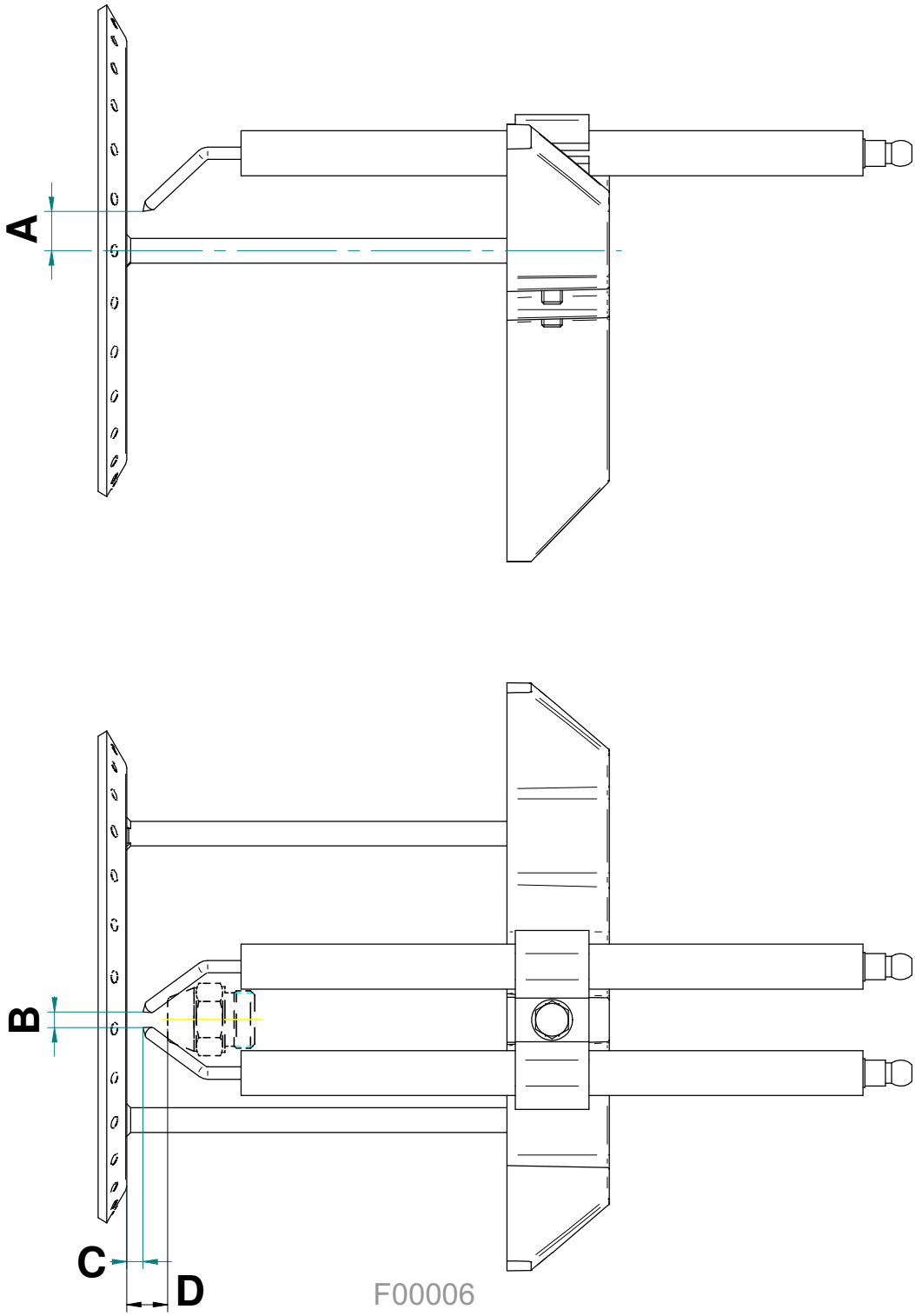

Fig. 16 Electrode positioning

LEGEND

A) Electrodes-axis distance = 10.5 mm

B) Distance between the electrodes = 4 mm

C) Disc-Electrodes distance = 4 mm

D) Disc-Nozzle distance = 10 mm

TROUBLESHOOTING

TYPE OF IRREGULARITY	PROBABLE CAUSE	RIMEDY
The control-box stops with flame (red light on). The failure is limited to the flame-controlling device.	1) Photoresistance is cut off or dirty with smoke.	1) Clean or replace it.
	2) Insufficient draught.	2) Check all smoke circuits inside the boiler and the chimney.
	3) The photo-resistance circuit is broken.	3) Replace the control-box.
	4) Dirty disk or mouth.	4)To be cleaned.
Not well-shaped flame with smoke and soot.	1) Insufficient combustion air.	1) Increase combustion air.
	2) Insufficient nozzie since it is dirty or worn out.	2) Clean or replace it.
	3) Clogged boiler pipe or chimney.	3) Clean them.
	4) Low spraying pressure.	4) Bring it to the prescribed value.
The burner does not start	1) Open contact in (Boiler or room) thermo-stats or pressure-switches.	1) Increase the value or wait for them to close by natural decrease in temperature or pressure.
	2) Short-circuited photo-resistance.	2) Replace it.
	3) There is no voltage because of the an open contact in the main switch or the meter overload-release, or no voltage in the line.	3) Close the contact of the switches or wait for voltage to be supplied again.
	4) The thermo-stats line was not carried out according to the diagram or thermo-stats did not close their contacts.	4) Check thermo-stat connections.
	5) Failure inside the control-box.	5) Replace it.
Defective flame with sparks.	1) Spraying pressure is too low.	1) Bring it to the expected value.
	2) Too much combustion air.	2) Decrease combustion air.
	3) Insufficient nozzle since it is dirty or worn out.	3) Clean or replace it.
	4) Water in fuel.	4) Discharge it from the tank by using a suitable pump (never use the burner pump to carry out this operation).
The control-box stops the burner without spraying fuel (red light on).	1) There is one phase missing.	1) Check the feeder line.
	2) Insufficient electric motor.	2) Repair or replace it.
	3) Light-oil does not reach the pump.	3) Check the suction pipe.
	4) No light-oil inside the tank.	4) Fill with fuel.
	5) Closed gate-valve in suction pipe.	5) Open it.
	6) Clogged nozzle	6) Disassemble and clean it completely.
	7) Motor (three-phase) rotating in the opposite direction as that indicated by the arrow.	7) Invert a phase in the input switch.

TYPE OF IRREGULARITY	PROBABLE CAUSE	RIMEDY
The control-box stops the burner with fuel spraying but no flame (red light on).	1) The ignition circuit is broken.	1) Check the circuit completely.
	2) The ignition transformer cables have dried over time.	2) Replace them.
	3) The ignition transformer cables are not well connected.	3) Fasten them.
	4) The ignition transformer is cut off.	4) Replace it.
	5) The electrode faces are not at the right distance.	5) Adjust them to the prescribed position.
	6) Electrodes discharge to earth since they are dirty or with a cracked insulation; also check under the clamps fastening the insulating materials.	6) Clean or, if necessary, replace them.

SPARE PARTS AND DISPOSAL

WARNING It shall be used only original spare parts, for more information refer to the document "General Instructions".

WARNING The appliance contains electrical and/or electronic components. Such components are to dispose of in according to local legislations.

F.B.R. Bruciatori S.r.l.
Via V. Veneto, 152 _ 37050 Angiari (VR) _ Italy
Tel. +39 0442 97000 _ Fax + 39 0442 97299
www. fbr.it _ email: fbr@fbr.it

The illustrations and data here shown are indicative. F.B.R. Bruciatori S.r.l. reserves the right to bring, without any obligation of warning, any changes that would be appropriate to the continuing development of their products.